ASSEMBLY GUIDE LINE FOR ECO DESK WITH DRAWER UNIT

PART LIST

1	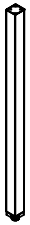	VERTICAL LEG ASSLY	4pcs
2		LEG SUPPORT PLATE	4pcs
3	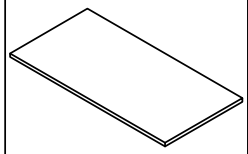	TABLE TOP	1pc
4	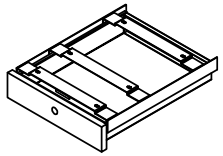	SINGLE DRAW UNIT @350L X 420D X 90HT	1pc
5		ALLEN SCREW BUTTON HEAD @ M6x16	4pcs
6		ALLEN SCREW CSK HEAD @ M6x16	24pcs
7	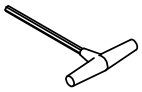	ALLEN KEY WITH HANDLE	1pc

STEP 1. ASSEMBLE THE LEG WITH SUPPORT PLATE

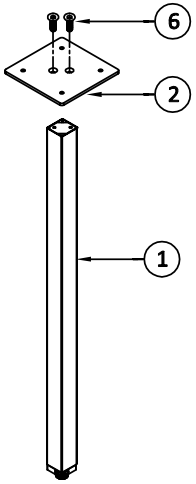

STEP 2. TABLE LEGS TO BE SCREWED TO THE TABLE TOP FROM BOTTOM SIDE WITH THE HELP OF SCREW.

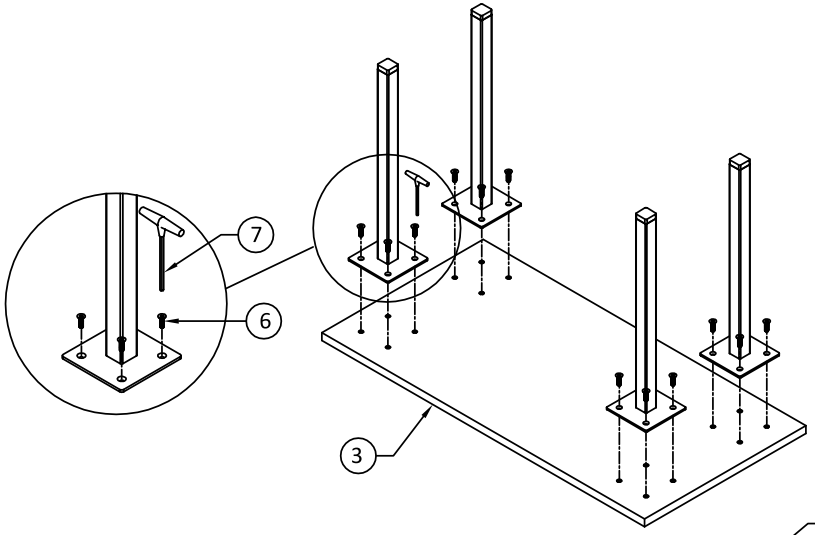

STEP 3. SINGLE DRAWER UNIT TO BE FIXED BY PULLING THE DRAWER OUT SIDE & LOCATING THE HOLES AT BOTTOM OF THE TABLE TOP.

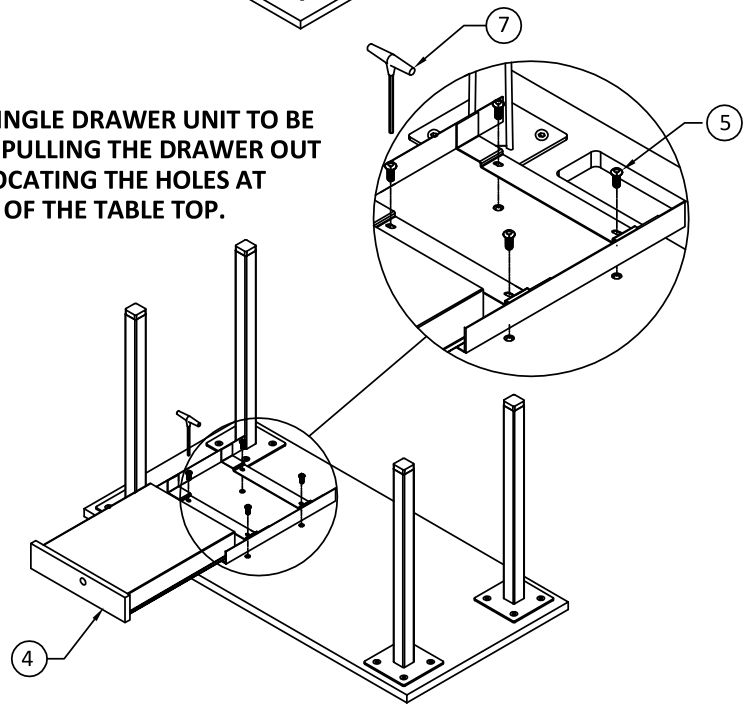

STEP 4. FINAL ASSEMBLED PRODUCT

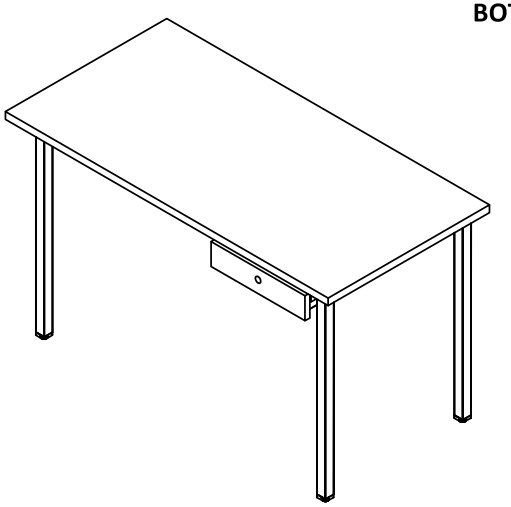

Maintenance Manual : Do's and Don't's

- Table tops should be cleaned using mild soap solution & wiped with dry cloth.
- Metal powder coated surfaces should be cleaned using gentle soft cloth
- Don't use thinner or water to clean stains from surfaces of table tops and metal powder coated parts.
- Don't place utensils containing liquid, hot material, sharp objects like knives, scissors which may damage or scratch the surface.
- Don't place hot objects such as electric skillets directly on table top surfaces as prolonged exposure to heat may cause damage.
- Chairs should be cleaned using dry cloth to wipe fabric wrapped seats, nylon base and metal power coated surfaces.
- Vacuum cleaning is recommended once in 3 months for chairs
- PET material should be cleaned with wet cloth/ disinfectant and should be stored in folded condition when not use.